Preemption-aware Admission Control in a Virtualized Grid Federation

Mohsen Amini Salehi, Bahman Javadi, Rajkumar Buyya

CLOUDS Laboratory
Department of Computing and Information Systems
The University of Melbourne, Australia
{mohsena,bahmanj,raj}@csse.unimelb.edu.au

Introduction: InterGrid

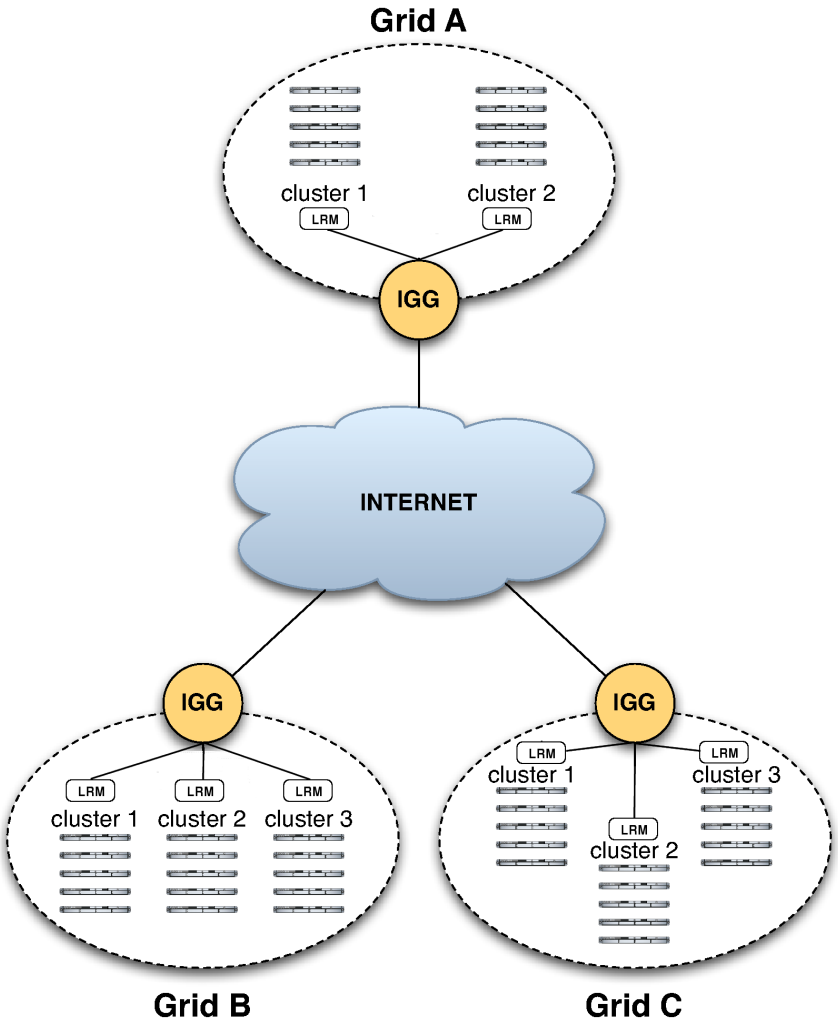

- Provides an architecture and policies for inter-connecting different Grids.
- Computational resources in each Grid are shared between grid (External) users and local users.
- Local users have preemptive priority over external users!

Contention between Local and External (Ext.) users

- Why contention happens?
  - Lack of resource (oversubscription of resources)
- Solution for Contention:
  - ***Preemption of Ext. requests in favor of local requests***
- Preemption ***increases the response time*** and ***leads to deadline violation*** for Ext. requests.

Research Question

- Deadline violations is because of over-subscription to the ext. requests.
- Resource owners tend to accept as many ext. requests as possible.
- The question that arises is:
  - ***What is the ideal number of ext. requests a cluster can accept in a way that:***
    - ***The number of accepted ext. requests is maximized***
    - ***Deadline violation is avoided***

MELBOURNE CLOUDS LAB

Our approach: Using Admission Control.

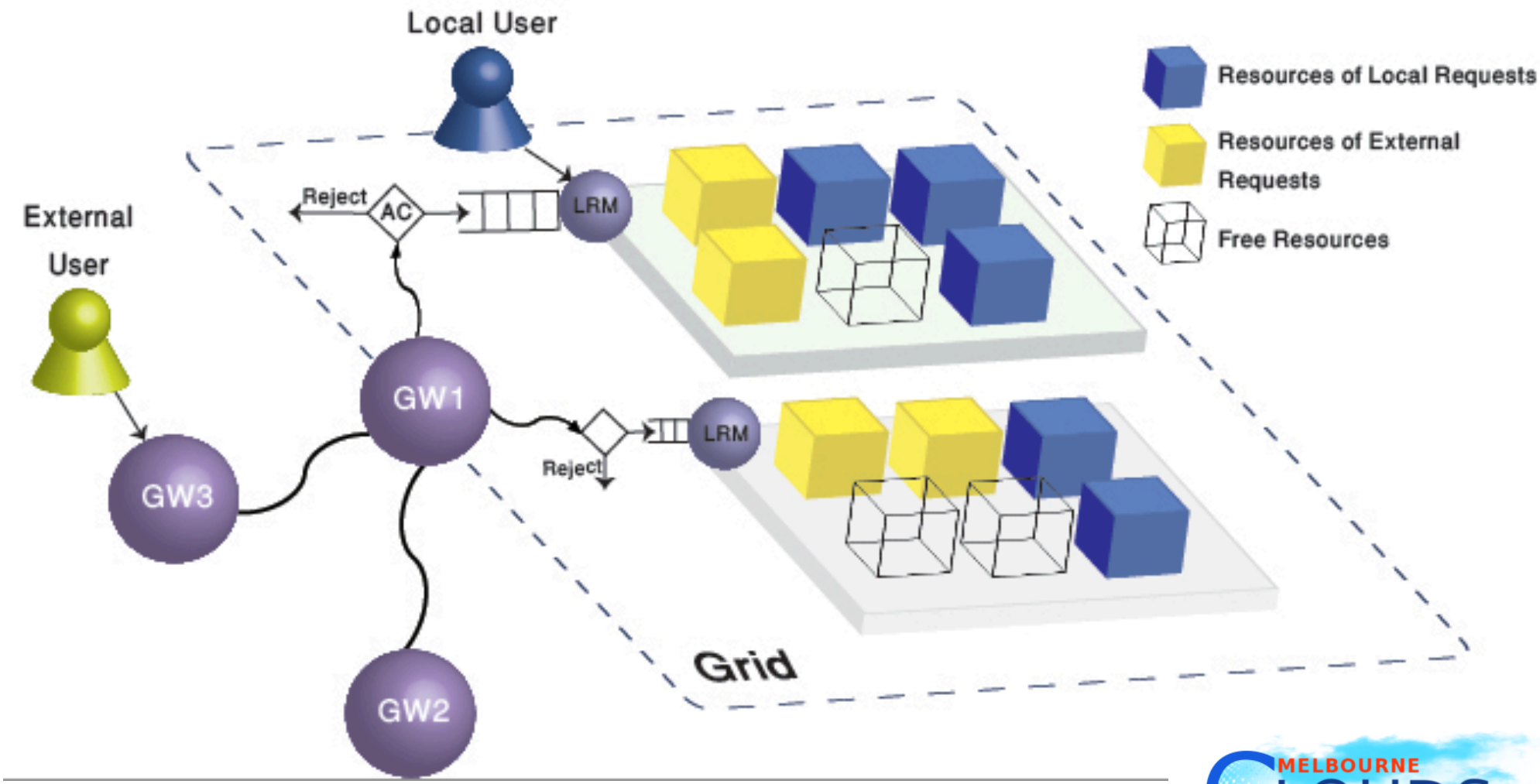

Problem Statement

- What is the optimal queue length (K_j) for ext. requests for in cluster *j*?
  - Analytical modeling of preemption for ext. requests in a cluster.

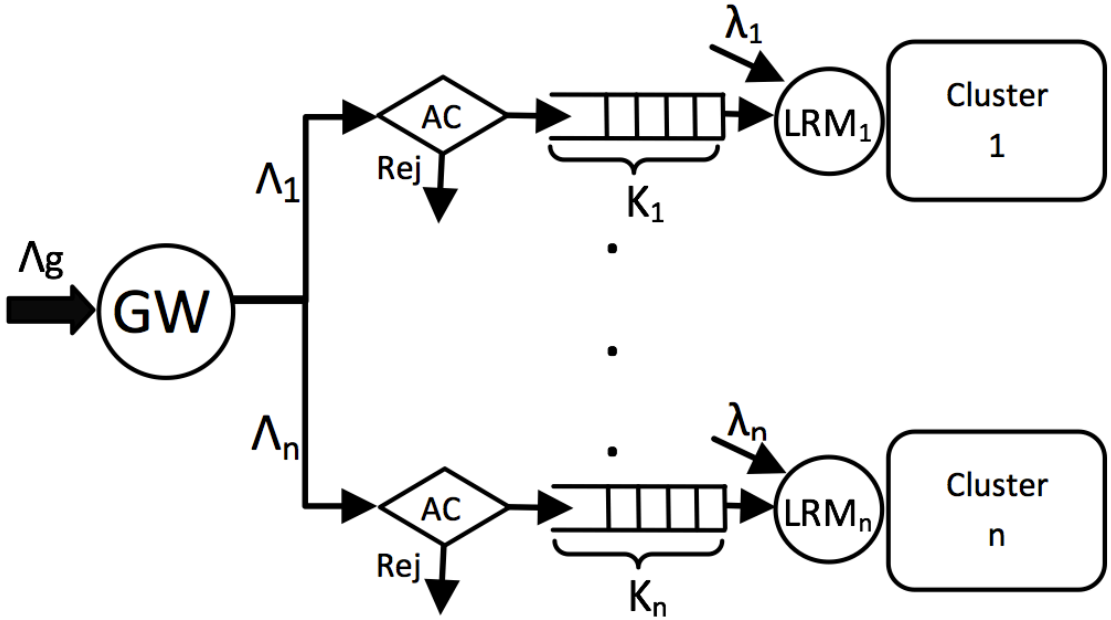

Assumptions

- Local requests are immediate and must be processed as soon as they are submitted.
- We assume an M/G/1 queue to model the service time of local requests.
- External requests are submitted to a queue in each cluster that can be modeled as an M/G/1/K queue model.
- All requests are moldable applications which can spread over all available resources in a cluster.

Analytical Model

- Our primary objective function is:

$$E(R_j) = E(W_j) + E(T_j) \leq D$$

- Assume that overall run time of an ext. request is ω, and encounters *n* preemptions before getting completed, then service time is:

$$T_j = e_1^j + l_1^j + e_2^j + l_2^j + ... + e_n^j + l_n^j + \epsilon$$

- Arrival rate of local requests (λ_j) follows Poisson distribution, so *n* follows Gamma distribution:

$$E(n) = \lambda_j \omega$$

Analytical Model(2)

$$E(T_j) = E(E(T_j|n)) = \omega + \lambda_j \omega E(l_1^j)$$

• We assume that local requests follow M/G/1 model, then:

$$E(T_j) = \frac{\mu_l^j \cdot \omega}{\mu_l^j - \lambda_j} = \frac{\omega}{1 - \rho_l^j}$$

•The average waiting time of external requests in the *M/G/1/K* queue is:

$$E(W_j) = \frac{1}{\Lambda_j} \sum_{k=0}^{K_j - 1} k \cdot P_{d,k}^j + \frac{K_j}{\Lambda_j}(P_{d,0}^j + \rho_e^j - 1) - E(T_j)$$

We have to figure out ρ^j_e and $P^j_{d,k}$

•ρ^j_e is the queue utilization for external requests:

$$\rho_e^j = \Lambda_j \cdot E(T_j) = \frac{\omega \cdot \Lambda_j}{1 - \rho_l^j}$$

Analytical Model(3)

- $P^j_{d,k}$ is the probability that a newly arriving external request encounters *k* requests waiting in the queue of cluster *j:*

$$P^j_{d,k} = \frac{P^j_{\infty,k}}{\sum_{i=0}^{K_j-1} P^j_{\infty,i}}, k = 0, 1, ..., K_j - 1$$

$$P^j_{\infty,k} = \frac{1}{\mu^j_e} \cdot \left(a_{k-1} \cdot P^j_{\infty,0} + \sum_{i=1}^{k-1} a_{K_j-i} \cdot P^j_{\infty,i}\right)$$

$$a^j_k = \int_0^\infty \frac{(t\lambda_j)^k}{k!} \cdot e^{-t\lambda_j} \cdot b_j(t) \cdot d_t$$

Analytical Model(4)

- $b_j(t)$ is the probability density function (PDF) of service time for ext. requests.
- Gong et al.[1] prove the service time of ext. requests with preemption follows the Gamma distribution.
- Based on Gamma distribution:

$$b_j(t) = \frac{(t/\alpha)^{\beta-1} \cdot e^{-t/\alpha}}{\alpha \cdot \Gamma(\beta)}$$

1. L. Gong, X.-H. Sun, and E. Watson. Performance modeling and prediction of nondedicated network computing. IEEE Transactions on Computers,, 51(9):1041 – 1055, sep 2002.

Preemption-aware Admission Control Policy (PACP) for cluster *j*

Algorithm 1: Preemption-aware Admission Control Policy (PACP) in cluster j.

Input: Λ_j,θ_j,ω,λ_j,μ_e^j,μ_l^j,$rate_l$,u_l,u_h
Output: K_j (Queue length)

$D \leftarrow (rate_l * u_l * \omega) + ((1 - rate_l) * u_h * \omega)$;
$K_j \leftarrow 0$;
$ExpectedResponse_j \leftarrow 0$;
while $ExpectedResponse_j < D$ **do**
  /*calculating $E(R)$ for a queue with length K_j in cluster j*/
  $\sigma \leftarrow 0$;
  for $N_q^j \leftarrow 0$ **to** $K_j - 1$ **do**
    $\sigma += N_q^j \cdot P_{d,N_q^j}^j$;
  $ExpectedResponse_j \leftarrow \frac{1}{\Lambda_j} \cdot \sigma_j + \frac{K_j}{\Lambda_j}(P_{d,0}^j + \rho_e^j - 1)$;
  $K_j \leftarrow K_j + 1$;

Performance Metrics

- We define *D* (average deadline of ext. requests) as:

$$D = (rate_l \cdot u_l \cdot \omega) + ((1 - rate_l) \cdot u_h \cdot \omega)$$

  - $rate_l$ is the proportion of low-urgency ext. requests and u_l, u_h are the deadline ratios.

- Deadline Violation Rate (DVR):

$$DVR = \frac{(a \cdot v) + r}{a + r} \cdot 100$$

  - *a* and *r are* percentage of accepted and rejected requests. *v* is the deadline violation ratio.
- Completed External Requests.

Experimental Setup

- We use *GridSim* for simulation
- 3 clusters with 64, 128, and 256 nodes and different computing speeds (2000, s2=3000, s3=2100 MIPS)
- Conservative Backfilling for cluster scheduling.
- Grid Workload Archive (GWA) is used to generate 2 days of bag-of-tasks requests.

Baseline Policies

- Conservative Admission Control Policy (CACP):
  - Admits as many requests as assigned by the IGG (queue length is infinite).
- Aggressive Admission Control Policy (AACP):
  - Each cluster accepts one external request at any time and tries to meet the deadline.
- Rate-based Admission Control Policy (RACP):
  - Queue length is determined based on the service rate for external requests and local request arrival rate in a cluster.

MELBOURNE CLOUDS LAB

Deadline Violation Rate (DVR)

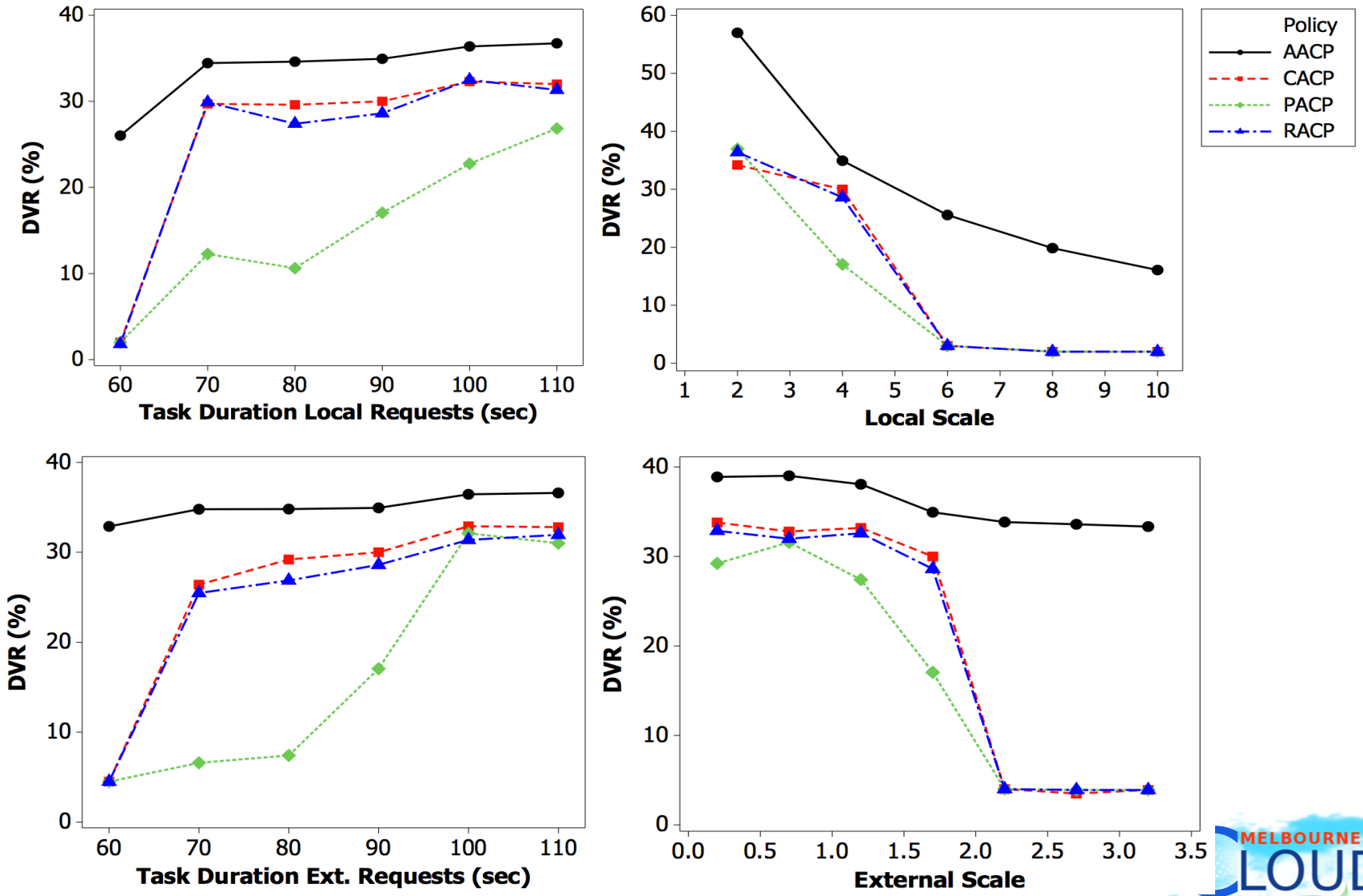

Completed External Requests

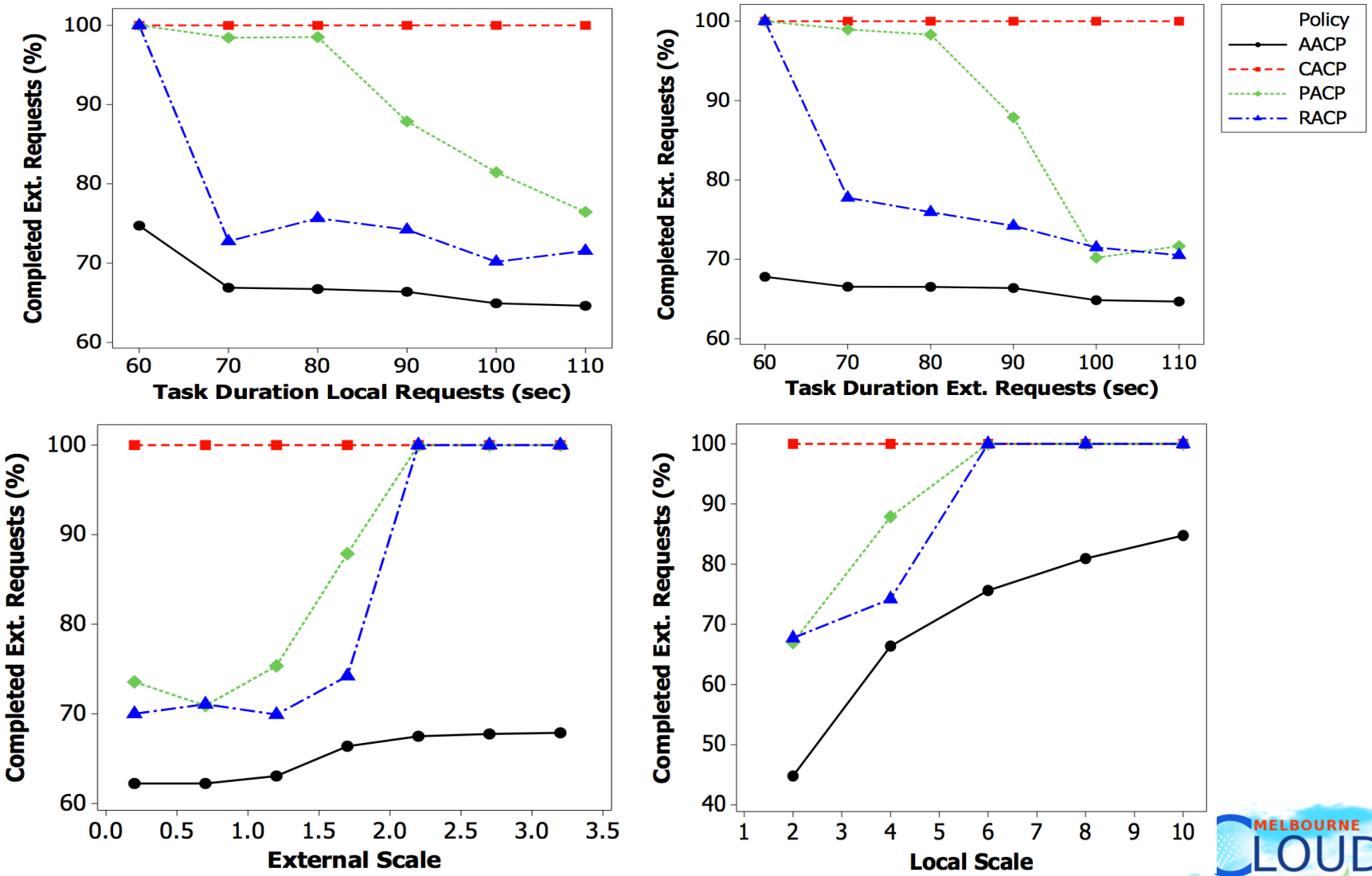

Conclusion and Future Work

- We explored the ideal number of ext. requests that a cluster can accept without violating deadlines in a federated Grid.
- We developed a performance model based on queuing.
- Experimental results indicate that the PACP decreases the deadline violation rate up to 20%.
- PACP leads to completing more ext. requests (up to 25%).
- In future, we plan to relax the assumption of moldable applications and solve the problem for all types of parallel requests.

MELBOURNE CLOUDS LAB

•Any Question?